Fab&Fix Letterplates

EXTERNAL DOORS

Nu Mail Shield Letterplate

Features

- **Stylish TS 008 letterplate solution**
  Independently tested to the latest TS008:2022 security standards for doors
- **Deflection shield**
  With clear access for postal items, the design of the internal flap skilfully manoeuvres post into the home but prevents any access to keys with a hook
- **Specifically engineered to restrict fishing**
  In protection mode, the inside flap is angled to cleverly shield against any unwanted intruders attempting to 'fish' through the door. Protecting the door handle, cylinder and belongings inside the home from manipulation
- **Thoughtfully designed to prevent damage**
  When open, the flap is restricted to 40° protecting the property within, automatically closing when not in use to prevent damage to interior walls. With a projection of only 34mm, Shield provides a stylish slimline aesthetic to the inside of the door.
- **Perfectly mix and match finishes**
  Supplied separately to suit most interior and exterior door finishes, the internal and external sections of the letterplate can be mixed and matched together in any combination in a choice of Fab&Fix perfectly matching suited finishes
- **Fully weather sealed with no external fixings**
  Prevents removal of the outer frame from the door. Internal brushes fully seal the letterplate for enhanced weather performance (with rubber gasket)
- **PAS 24 requirements and Document Q**
  PAS 24: 2022 now requires an external door fitted with a letterplate to meet TS008: 2022 as part of the door package
- **Wide range of applications**
  Suitable for use on 44mm - 70mm thick timber and composite doors

Mix and match the external finish:

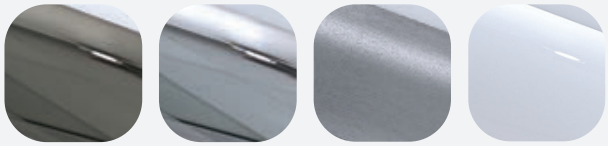

Hardex Bronze | Hardex Chrome | Hardex Graphite | White

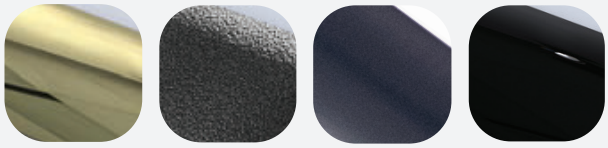

Hardex Gold | Antique Black | Anthracite Grey | Black

Mix and match the internal finish:

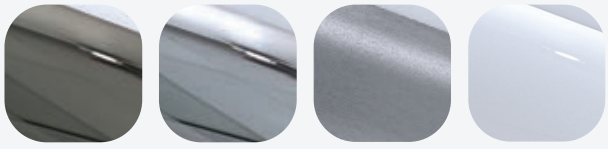

Hardex Bronze | Hardex Chrome | Hardex Graphite | White

Hardex Gold | Antique Black | Black

10 YEAR Mechanical Guarantee

Timber | Composite

Secured by Design — Police Preferred Specification

TS008: 2022 KM 660920

PAS 24

When both internal and external letterplate sections are used together. PAS 24 as part of a compliant doorset

BS EN 1634-1 — 30 Minute Timber (FD30)

BS EN 1634-1 — 60 Minute Timber (FD60)

certifire — APPROVED PRODUCT CF6171

Fab&Fix **Letterplates**

EXTERNAL DOORS

Nu Mail Shield Letterplate

Ordering Details

Nu Mail Shield Letterplate

Finish	Internal Letterplate	External Letterplate
Hardex Chrome	DLPNSINMRHC	DLPNSOUMRHC
Hardex Bronze	DLPNSINMRHB	DLPNSOUMRHB
Hardex Gold	DLPNSINMRHG	DLPNSOUMRHG
Hardex Graphite	DLPNSINMRGR	DLPNSOUMRGR
Antique Black	DLPNSINMRAB	DLPNSOUMRAB
Anthracite Grey	-	DLPNSOUMRAG
White	DLPNSINMRWH	DLPNSOUMRWH
Black	DLPNSINMRBK	DLPNSOUMRBK
Intumescent Strip	DLPNSIK	

Technical Information

Corrosion resistance
Meets the requirements of BS EN 1670:2007 Grade 5 (480 hours)

Operation
Flap cycle tested to 20,000 cycles

Performance
Independently tested to meet the requirements of TS008: 2022 when both internal and external letterplate sections are used together. Designed to meet the requirements of PAS 24 in a compliant door set. CERTIFIRE accredited and successfully included in a 30 minute and 60 minute timber fire door set test in accordance with BS EN 1634-1. Must be used with intumescent strip.

Fixings
Includes 2 x M5 screws, 2 x M4 screws and 6 x wood screws and 2 x M4 shoulder bolts.

Material Specification

Frame:	High quality Zinc
Coatings:	Hardex Chrome, Hardex Bronze, Hardex Gold, Hardex Graphite, Antique Black, Anthracite Grey, White and Black.

Classification

The Nu Mail Shield has been certified to TS008:2022 and carries the following classification:

Category	1	2	3	4	5	6	7	8
Classification	A	1	2	N	3	N	1	0

Maintenance

For continued protection of the quality finish and appearance, we advise routine cleaning of all our external hardware. We recommend wiping it with a clean cloth soaked in warm water and mild detergent every month. Please refrain from using heavy-duty cleaners, containing Chlorine or Potassium. Moving parts should also be lightly lubricated using a light non-acidic mineral oil (e.g., "3 in 1") at least twice per year. The product may need to be adjusted and fixings tightened to ensure a satisfactory operation. This procedure is particularly essential if products are used within a 25-mile radius of coastal areas or close proximity to building sites or large industrial areas, where more frequent cleaning may be required to prevent the accumulation of corrosive contaminants.

Packaging

Nu Mail Shield Letterplate
Internal and external section of the letterplate individually packaged with fixings.10 letterplate sections in an outer box.

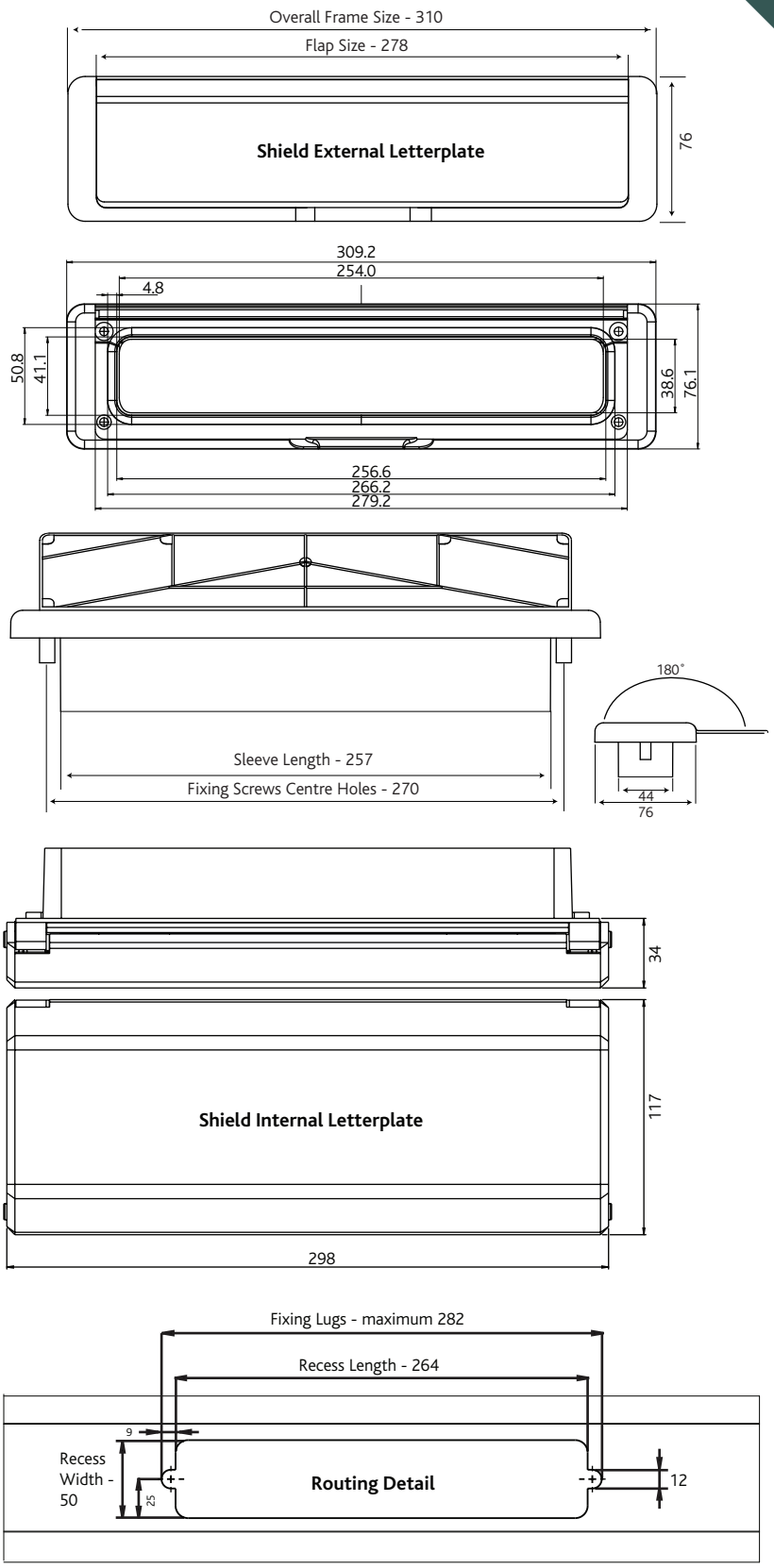

All dimensions are in mm. Fab&Fix reserves the right to change specification without notice. It is the responsibility of the door manufacturer to ensure that the finished product meets any required safety and performance specification.

ERA Valiant Way, Wolverhampton, West Midlands WV9 5GB United Kingdom
Tel: +44 1922 490049 Fax: +44 1922 494420 info@erahomesecurity.com
www.eraeverywhere.com