ERA

British Standard Mortice Locks

EXTERNAL DOORS

BS High Security Fortress Euro Cylinder Lock

BS3621:2017

Features

- Meets the requirements of BS3621:2017 and is suitable for the demands of the insurance companies and the Police
- Each lock is supplied with a High Security 6 pin Euro Profile Cylinder resistant against picking or drill attacks
- High security levels are delivered by a 20mm bolt throw
- Hardened steel plates on both to resist drilling
- Four hardened steel plates in both models resists hacksawing
- Sashlock features an easily reversible pull and twist action latch bolt without the removal of the lock cover
- Bolt through heavy duty security roses protect the cylinder
- 64mm (2½") and 46mm (3") backset options
- Rebates Sets available in 12.7mm (1/2") and 25.4mm (1")
- Brass Effect, Satin or Chrome Effect finishes available

Deadlock

Sashlock

10 YEAR Mechanical Guarantee | Timber | Composite | BS3621:2017 | Secured by Design Police Preferred Specification | CE | UKCA

ERA British Standard Mortice Locks

EXTERNAL DOORS

BS High Security Fortress Euro Cylinder Lock

Ordering Details

Fortress Euro Cylinder Deadlock

Finish	Part No. Boxed Version
Brass Effect 64mm (2½")	263-31A
Satin 64mm (2½")	263-51A
Chrome Effect 64mm (2½")	263-61A
Brass Effect 76mm (3")	363-31A
Satin 76mm (3")	363-51A
Chrome Effect 76mm (3")	363-61A

Fortress Euro Cylinder Sashlock

Finish	Part No. Boxed Version
Brass Effect 64mm (2½")	264-31A
Satin 64mm (2½")	264-51A
Chrome Effect 64mm (2½")	264-61A
Brass Effect 76mm (3")	364-31A
Satin 76mm (3")	364-51A
Chrome Effect 76mm (3")	364-61A

Deadlock Rebate Sets

Finish	Part No.
Brass Effect 12.7mm (½") Rebate	426-31
Satin 12.7mm (½") Rebate	426-51
Chrome Effect 12.7mm (½") Rebate	426-61
Brass Effect 25.4mm (1") Rebate	427-31
Satin 25.4mm (1") Rebate	427-51
Chrome Effect 25.4mm (1") Rebate	427-61

Sashlock Rebate Sets

Finish	Part No.
Brass Effect 12.7mm (½") Rebate	428-31
Satin 12.7mm (½") Rebate	428-51
Chrome Effect 12.7mm (½") Rebate	428-61
Brass Effect 25.4mm (1") Rebate	429-31
Satin 25.4mm (1") Rebate	429-51
Chrome Effect 25.4mm (1") Rebate	429-61

Important: When a rebate set is fitted with a British Standard mortice lock, the Kitemark insurance accreditation will become void, meaning that the product will no longer be covered by an insurance policy if declared.

Classification Codes

Deadlock	Sashlock
1121 - AG5057 13	1121 - AG5056
BS EN 12209:2003	BS EN12209:2003
3H810F7KA00	3H810F7KA20

Deadlock

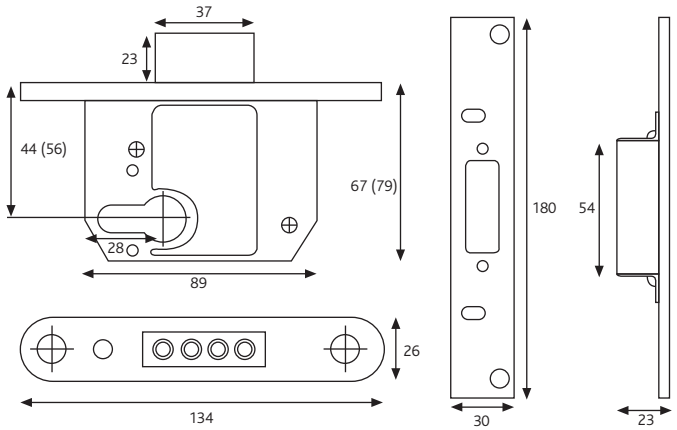

Sashlock

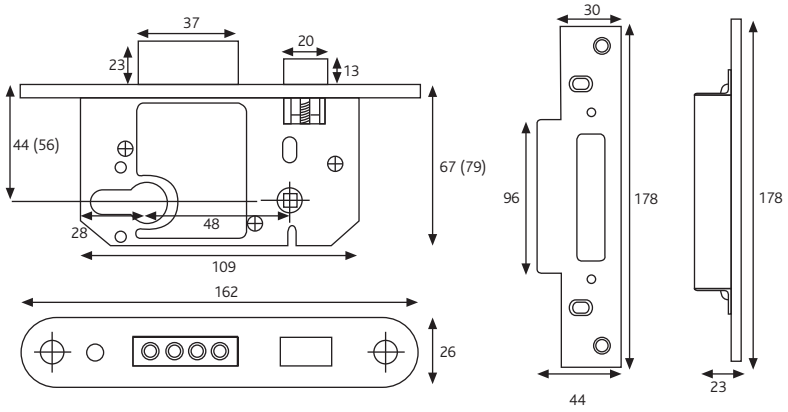

All dimensions are in mm and are nominal. Numbers in brackets relate to 3" version of lock. Diagram illustrates product in locked position.
ERA reserves the right to change specification without notice
It is the responsibility of the door manufacturer to ensure that the finished product meets any required safety and performance specification.

Packaging

Boxed version
1 lock per inner box, 10 locks per outer box. 0.84Kg per item, 8.4Kg per outer box.

Maintenance

Wipe the surface periodically with a soft cloth to remove excess grease or moisture.

ERA Valiant Way, Wolverhampton, West Midlands WV9 5GB United Kingdom
Tel: +44 1922 490049 Fax: +44 1922 494420 info@erahomesecurity.com
www.eraeverywhere.com